kern

| Link | Verge | Eclipse | Castro |

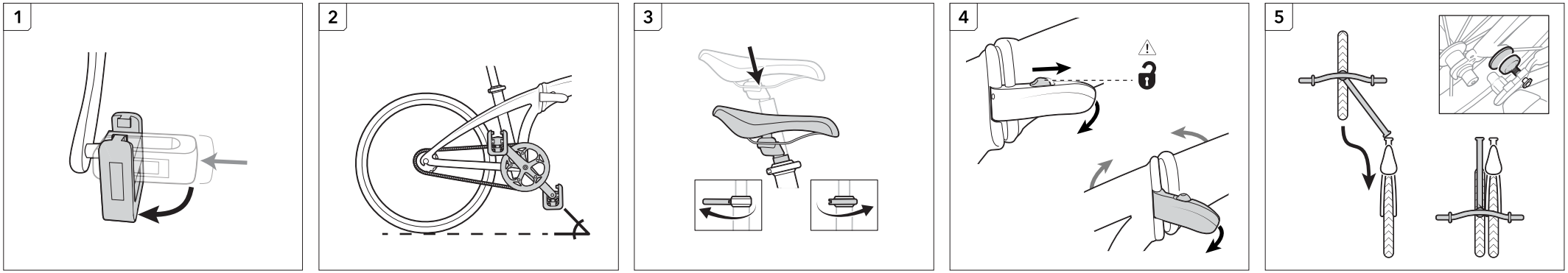

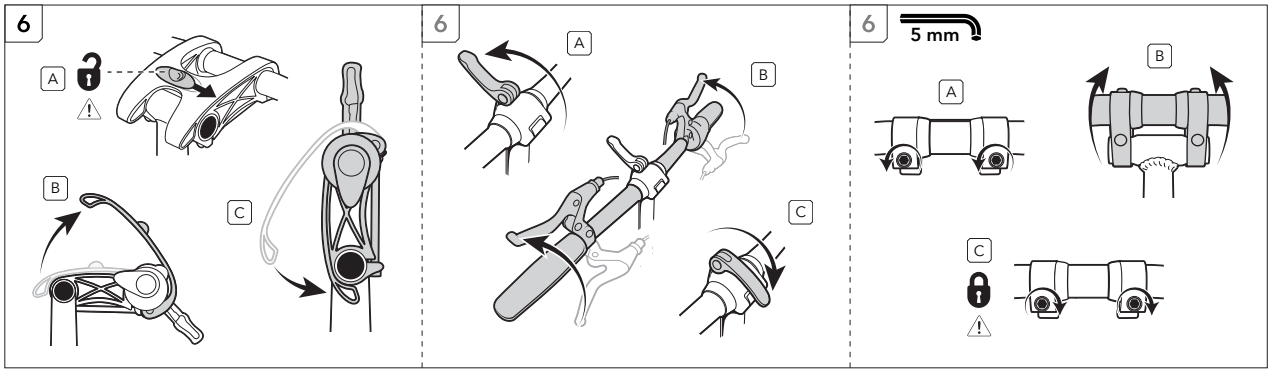

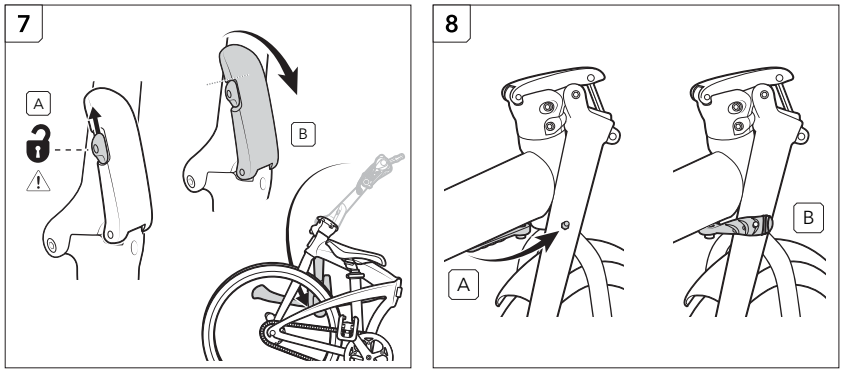

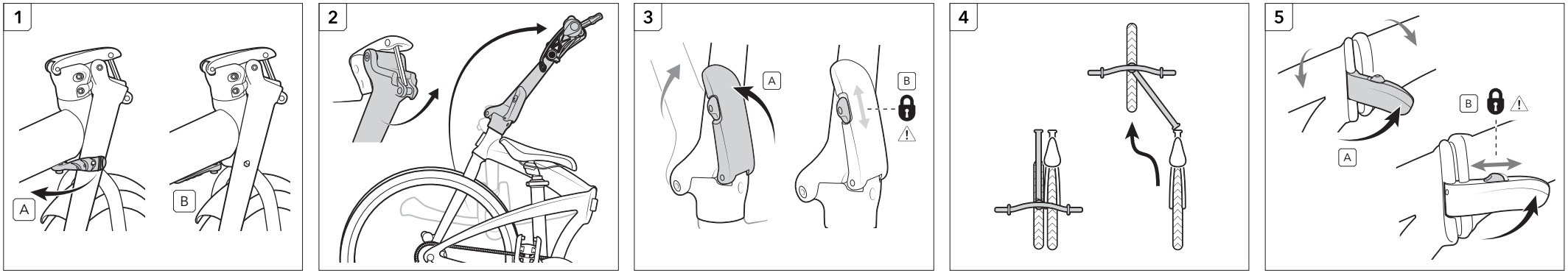

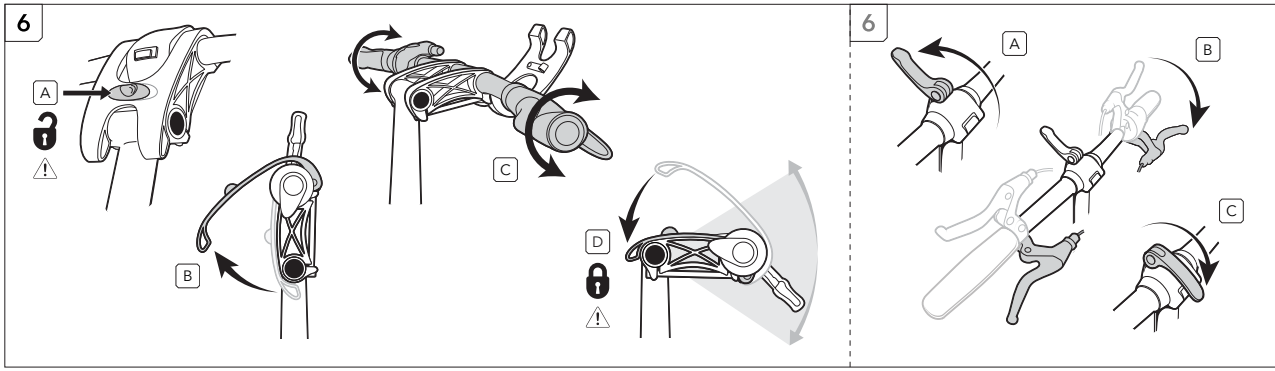

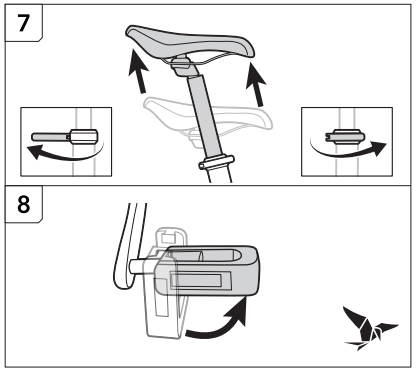

© 2011, Mobility Holdings, Ltd. | 2011-TN-FI-generic-web-v06