kern

Link B7, C3i, C7, C7i
(Q-Lock™ Handlepost)

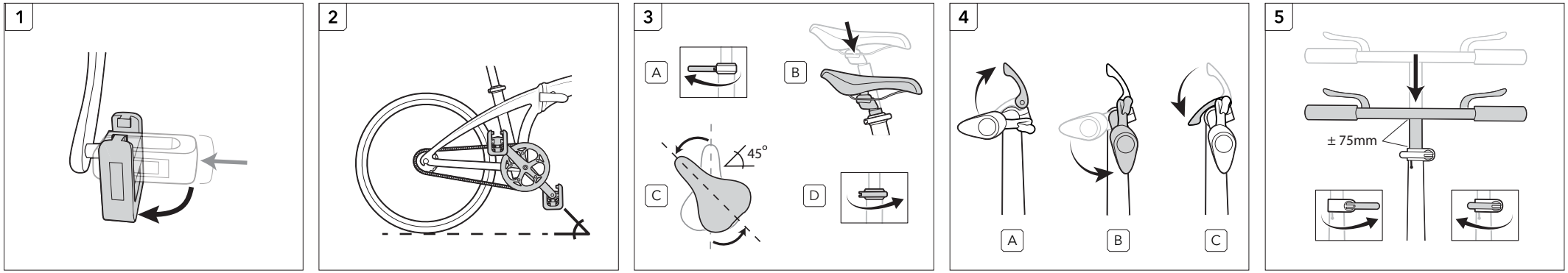

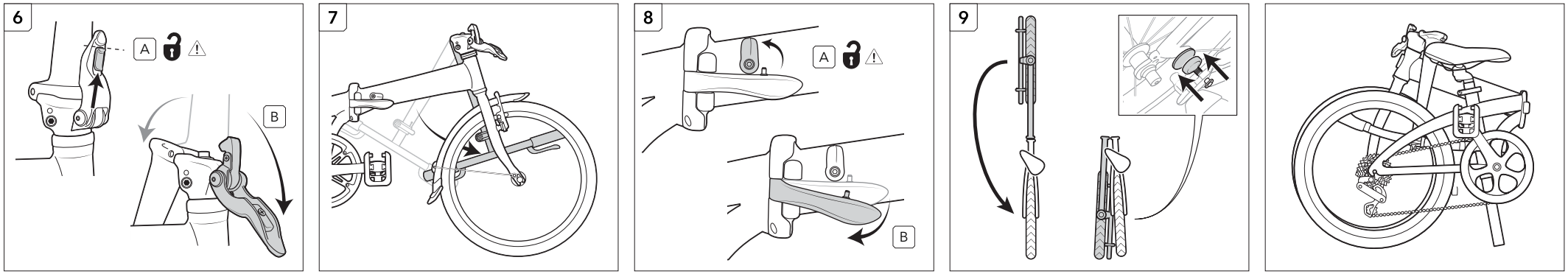

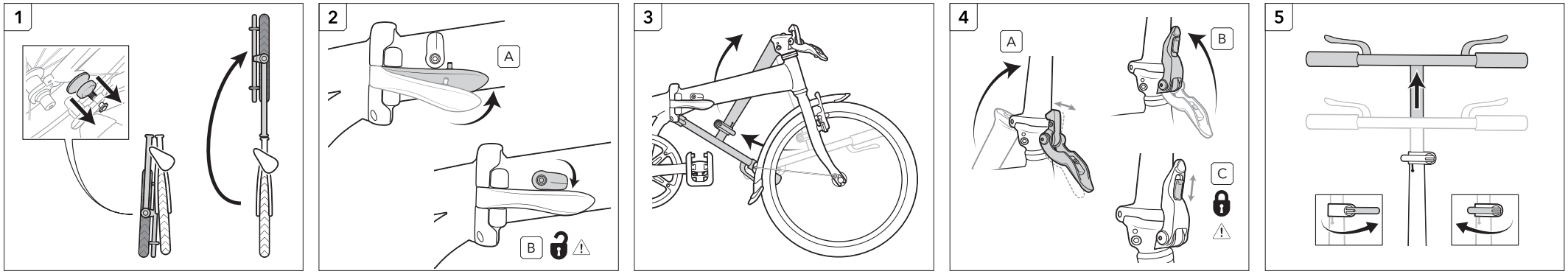

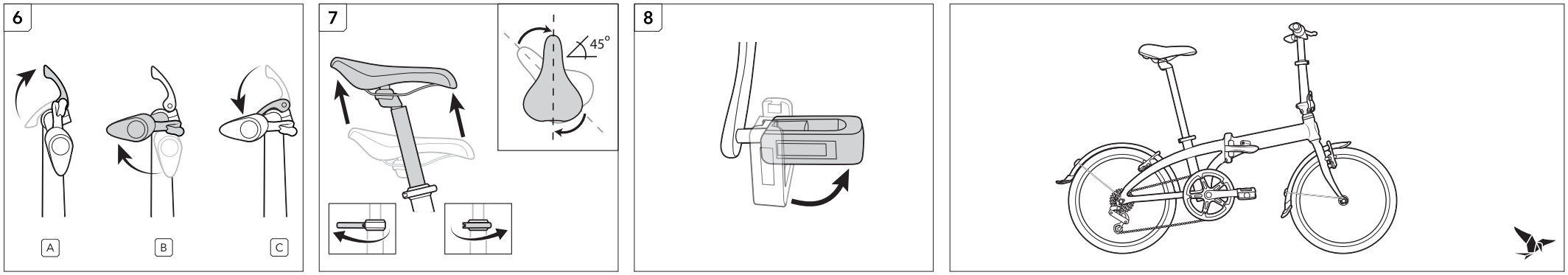

© 2011-2016, Mobility Holdings, Ltd.